Age Range: 3 and up
Weight Limit: 130 lbs.
Surfaces: Grass/Asphalt/Hard Surfaces
Speed: 2.5 For/Rev
5.0 For
Colors: Purple Body/ BlackWheels

Intro: 2011
Suggested Retail: $264.99
Box Dimensions: 18.375" x 33.375" x 44.75"; 67 lbs.
Warranty: One Year Vehicle
6 Months Battery

W4473
Barbie Jammin' Jeep

12V
Advanced Series

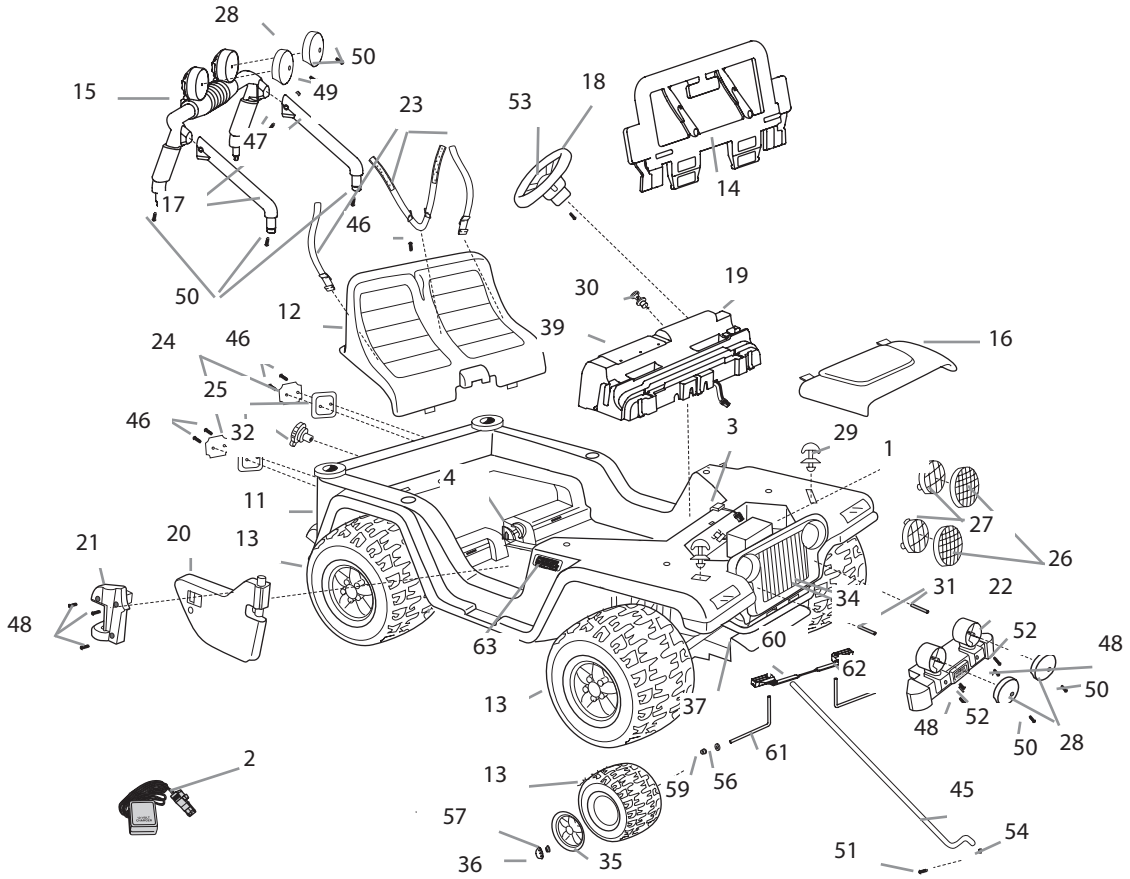

Item	Part Number	Description	QTY
1	00801-1869	12V Single Battery	1
2	00801-1778	12V Single Charger	1
3	**C2390-9799D**	**Main Harness Assembly**	**1**
4	74310-9239	Shifter Assembly	1
11	N/A	Body	1
12	W4473-2319	Seat	1
13	B7659-2459	Wheel	4
14	W4473-2619	Windshield	1
15	W4473-9219	Roll Bar	1
16	W4473-2859	Hood	1
17	W4473-9379	Roll Bar Support	2
18	W4473-2979	Steering Wheel	1
19	W4473-9299	Dash w/ Radio	1
20	W4473-9229	Door (Right)	1
21	W4473-2249	Door Hinge (Right)	1
22	W4473-9189	Front Bumper w/Logo	1
23	L6349-5339	Seatbelt Set	1
24	N/A	Taillight Lens Set	1
25	N/A	Taillight Housing Set	1
26	N/A	Headlight guard	2
27	N/A	Headlight Lens	2
28	W4473-2169	KC Light Cover	4
29	T8396-9559	Hood Latch	2
30	75840-9409	Key Assembly	1
31	H3427-2529	Spacer	2
32	N/A	Gas Cap	1
34	W4473-2849	Grill	1

Item	Part Number	Description	QTY
35	B7659-2469	Hubcap	4
36	B7659-2679	Hubcap Cover	4
37	W4473-2119	Front Module	1
39	T8396-9629	Soundbox	1
45	H4803-4409	Steering Column	1
46	N/A	8 x 1 Screw	5
47	N/A	8-32 x 1.625" Screw	2
48	N/A	10 x 1 Screw	11
49	N/A	8 Acorn Lock Nut	2
50	N/A	10 x 1/2 Screw	10
51	0912-8001	8 x 3/4 Screw	1
52	N/A	8 x 3 Screw (Order Hardware Bag)	2
53	00801-1565	5/32" x 1 1/2" Pin	1
54	00801-1620	Steering Column Cap (.354 Retainer)	1
56	0801-0196	7/16 Washer	4
57	0801-0227	.437 Cap Nut	6
59	74550-2689	7/16 Round/Axle Bushing	2
60	75840-4409	Cross Bar	1
61	B7659-4519	Front Axle	2
62	B7659-9419D	Steering Linkage	1
63	00801-1518	Power Wheels Emblem	1

Part Number	Description	QTY
W4473-0920	Owners Manual	1
W4473-0310A	Label Sheet	1
00801-1756	**Switch Control (Shifter Rocker)**	**1**
W4473-2279	Door Hinge (Left)	1
W4473-9209	Door (Left)	1
00968-2921	**# 7R Motor Gearbox Assembly**	**2**
00968-2820	**# 7R Gearbox**	**2**
00968-2717	**# 7R Motor Pinion**	**2**
L7820-4529	Rear Axle	1
74020-9839	Footboard Assembly	1
3800-7809	Battery Retainer	1
0801-0578	Screw Pan 1/4-14 X1.5	2
74460-2249	Wheel Driver 10 RIB	2
W4473-2489	Channel Cover	1
T8396-2859	Soundbox Cover for Barbie Jammin Jeep	1
00801-2039	**Footswitch (plunger-type)**	**1**
W4473-2729	Steering Wheel Button for Jeep	1

Parts Not Shown

Part Number	Description	QTY
W4473-9269	Parts Bag	1
T8396-9289	Hardware Bag	1

4/12/2011 13:14

Bold and underlined parts are to be purchased and installed by Service Centers only. These items may not be sold directly to consumers by Service Centers or Fisher-Price.

* See service builtin 184

N/A = Not Available