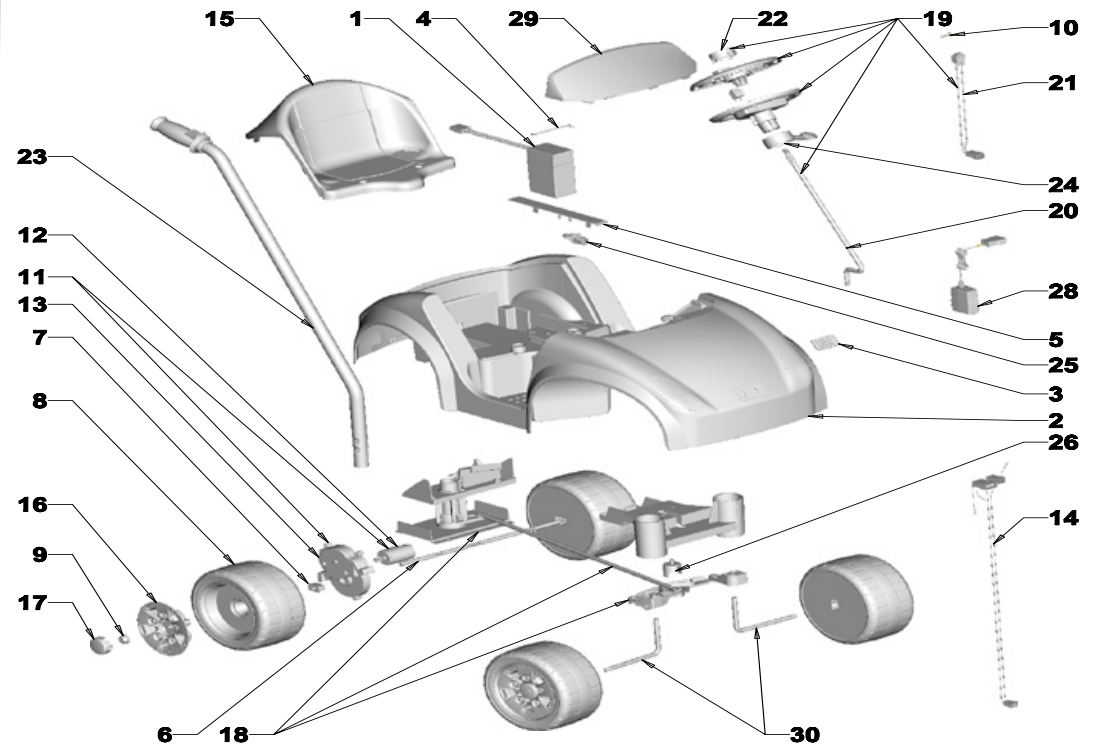

27 - SEAT BELT NOT SHOWN

R2510 Disney Princess Tot Rod TRU Toddler	
Age Range:	1-3 years
Weight Limit:	40 lbs
Surfaces:	Hard Surfaces
Speed:	2 mph forward only
Colors:	Pink Body/ Purple Wheels
Intro:	2009
Suggested Retail:	$139.99
Box Dimensions:	19.38 x 12.13 x 35.50
Warranty:	One Year Vehicle
	Six Months Battery

POWER WHEELS by Fisher-Price®

Item	Part #	Description	QTY	Item	Part #	Description	QTY
1	00801-1457	6Volt 4amp battery	1	29	3800-8911	Windshiled for Disney Princess	1
2	N\A	Body		30	77760-4519	Font Axle	2
3	00801-1503	PW Emblem	1	31			
4	74230-4129	Battery Retainer	1	32			
5	R2510-2529	Wire Cover	1	33			
6	G2580-4509	Rear Axle	1	34			
7	76920-2549	Rectangular Bushing (no ext.)	2	35			
8	R2510-2129	Wheel for Disney Princess Tot Rod	4	36			
9	0801-0548	.354 Palnut-white	6	37			
10							
11	**00968-3900**	**#10 Motor Gearbox Assm.**	**1**				
12	**00968-3700**	**Motor Pinion Assm.**	**1**				
13	**00968-3800**	**#10 Gearbox Assm.**	**1**				
14	**G2580-9799**	**Wire Harness**	**1**				
15	3800-8910	Seat for Disney Princess Tot Rod	1				
16	G2580-2149	Hubcap	4				
17	G2580-2159	Hubcap Center	4				
18	3800-7747	Steering Linkage	1				
19	3800-8909	Steering Wheel w/ Harness	1				
20	R2509-4019E	Steering Column for Disney Princess	1				
21	See # 19	Steering Wheel Harness	1				
22	R2510-2259	Steering Wheel Cap	1				
23	R2510-9309	Handle for Disney Princess Tot Rod	1				
24	R2510-2429	Turn Signal Arm	1				
25	R2510-2459	Key assm	1				
26	77760-2359	Steering Column Retainer	1				
27	R2510-5509	Seatbelt	1				
28	00801-1483	Charger 4amp fused - 6volt	1				

Parts Not Shown

Part #	Description	QTY
00801-0697	**Switch Signalux - 2 prong**	**1**
M1350-2179	Wheel Bushing for Firetruck	2
3800-8992	Parts Bag for Disney Princess	1
R2510-0310	Label for Disney Princess	1
R2510-0920	Manaul for Disney Princess Tot Rod	1
R2510-9079	Hardware Bag	1
00801-1567	Assembly Tool	1

8/5/2009 12:41

Bold and underlined parts are to be purchased and installed by Service Centers only. These items may not be sold directly to consumers by Service Centers or Fisher-Price.