76961-9564 - Europe
76961-9464 - Europe (Spanish Phone)

76963-9564 Canada / Mexico
76963-9464 Canada / Mexico (Spanish Phone)

76961-9564 Australia

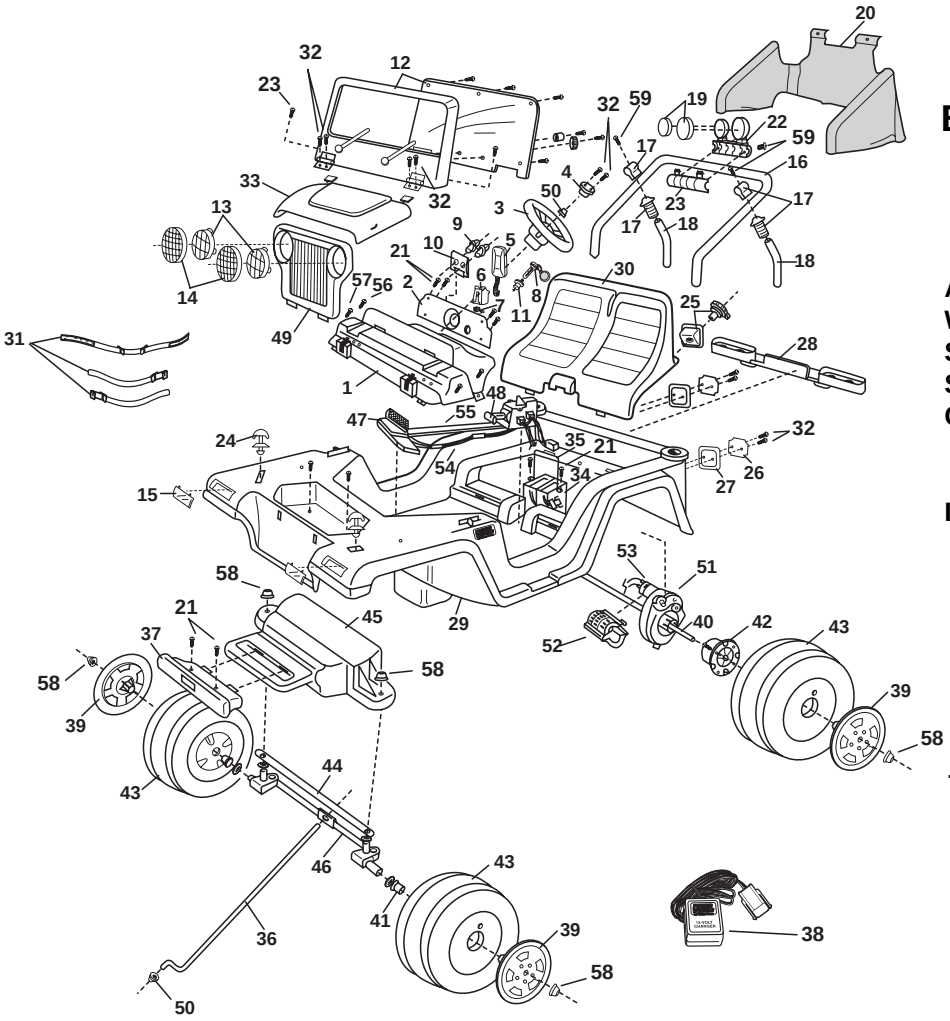

Super Talk!

Barbie Sun Jammer

Advanced Series
12 Volt

(With a 100,000 Phrase Phone)

Age Range: 3-7 Years
Weight Limit: 130 lbs.
Surfaces: Hard, Grass & Hills
Speed: 2.5 / 5.0 MPH
Colors: White Body
Bright Pink Wheels
Aqua Seats
Intro: 12-11-96 U.S.

This product is affected by the PW recall announced Oct 1998. Please confirm that the product is modified or remediated in accordance with policy.

Rev.10/29/03

Item No.	Description	Part No.	Qty.
1	Dash	77571-2689	1
2	Dashboard Plate	76960-2329	1
3	Steering Wheel	76960-2379	1
4	Steering Wheel Cap	76960-2339	1
5	Phone **(English)**	76960-9449	1
	(Spanish Phone)	**76963-9449**	**1**
	(French Phone)	**76963-9439**	**1**
6	Phone Holder	76960-2029	1
7	Phone Holder Clip	76960-2039	1
8	Key Chain	76960-2449	1
9	Dashboard Knob	76960-2489	2
10	Knob Plate	76960-2439	1
11	Key Assembly	76960-9479	1
12	Windshield	76960-9769	1
13	Headlight Lens	74450-2279	2
14	Lens Guard	76960-2469	2
15	Turn Signal Lens	74440-2349	2
16	Sport Bar	76960-9219	1
17	Sport Bar Bracket/Swivel	76960-2269	1
18	Sport Bar Support	77571-4229	2
19	Light Cover	76960-2319	2
20	Canopy	76960-9559	1
21	#8 x 3/4” Screws	0801-0223	8
22	Light Rack-Set	76960-9349	1
23	#8 x 1/2” Screw	0801-0202	2
24	Hood Latch	76960-9419	2

Item No.	Description	Part No.	Qty.
25	Gas Cap Assembly	76960-9229	1
26	Taillight Lens	73233-2279	1
27	Taillight Housing	76960-2659	1
28	Rear Bumper	76960-2529	1
29	Vehicle Body	77571-2109	1
30	Seat	76960-2309	1
31	Seat Belt Set	76960-5339	1
32	#8 X 1” Screws	0801-0224	10
33	Hood	77571-2359	1
34	6-Volt Battery	0801-0431	2
35	Battery Retainer	74440-4019	1
36	Steering Column	74440-4239	1
37	Front Bumper	76960-2519	1
38	12-Volt Charger - **Europe**	0801-0553	1
	12-Volt Charger **Can / Mex**	0801-0225	1
	12-Volt Charger **Australia**	0801-0232	1
39	Hubcap	74440-2579	4
40	Rear Axle	74440-4519	1
41	Axle Bushing	74550-2689	2
42	Driver	76960-2249	2
43	Wheel N/A	76960-2459	4
	(Order Sub Part)	74440-2459)	4
44	Cross Bar	74440-4419	1
45	Front Module	76960-2119	1
46	Axle/Linkage Assy.	76960-9699	1
47	Footboard Assy.	76960-9299	1

Item No.	Description	Part No.	Qty.
48	Shifter	76960-9039	1
49	Grill	77571-2849	1
50	Cap Nut .354	0801-0251	2
51	Motor Gearbox Assembly	77571-9519	2
52	Motor Cover	76803-2489	2
53	**Motor w/Pinion**	**74440-9579**	**2**
54	**Wiring Harness**	**74440-9799**	**1**
55	Channel Cover	77571-2419	1
56	#10 x 1” Screw	0801-0220	2
57	#10 x 1/2” Screw	0801-0540	2
58	Cap Nut .437	0801-0227	6

PARTS NOT SHOWN

Main Label Sheet	76960-0320	1
Windshield Label	76960-0330	1
Literature Bag	76961-9019	1
Small Parts Bag	76960-9259	1
Large Parts Bag #1	76969-9249	1
Large Parts Bag #2	74443-9279	1
Gearbox w/out Motor	**77571-9529**	**1**
Phone Hlder Screw #6x1”	0801-0254	1
1/4” x 1-1/2” screw	0801-0467	2
30 Amp Fuse	0801-0229	2

Bold and Underlined parts are to be purchased and installed by Service Centers only. These items may not be sold directly to consumers by Service Centers or Fisher-Price.